HIGH-FREQUENCY QUASI-RESONANT AND MULTI-RESONANT CONVERTER TECHNOLOGIES

F.C. Lee
Virginia Power Electronics Center
Virginia Polytechnic Institute and State University
Blacksburg, Virginia 24061

Abstract

Resonant switch topologies operating under the principle of zero-current switching (ZCS) and zero-voltage switching (ZVS) are introduced to minimize switching losses, stresses and noises. Employing the resonant switch concept, a host of new quasi-resonant converters (QRCs) are derived from the conventional PWM converters. They are capable of operating in megahertz range, with a significant improvement in performance and power density. Characteristics of these QRCs and MRCs are reviewed and their relative metics and limitations are assessed.

I. INTRODUCTION

Electronic power processing technology has evolved around two fundamentally different circuit schemes: duty-cycle modulation, commonly known as Pulse-Width Modulation (PWM), and resonance. The PWM technique processes power by interrupting the power flow and controlling the duty cycle, thus, resulting in pulsating current and voltage. The resonant technique processes power in a sinusoidal form. The power switches are often commutated under zero-current *("soft"* turn off) but switches are turned on with an abrupt increase of device current *("hard"* turn on). In cases when resonant converters operate above the resonant frequency, the switches are turned off abruptly (forced or hard turn off) but turned on softly. Compared with PWM converters, the switching losses and stresses of resonant converters are reduced. However, the conduction loss is generally increased since the sinusoidal current produces higher rms current. Due to circuit simplicity and ease of control, the PWM technique has been used predominantly in today's power electronics industry, particularly, in low-power applications. Resonant technology, although well-established in high-power SCR motor drives and uninterrupted power supplies, has not been widely used in low-power dc-dc converter applications due to its circuit complexity.

With available devices and circuit technologies, PWM converters have been designed to operate generally with a 30-50 kHz switching frequency. In this frequency range, the equipment is deemed optimal in weight, size, efficiency, reliability and cost. In certain applications where high-power density is of primary concern, the conversion frequency has been chosen as high as several hundred kilohertz. With the advent of power MOSFETs, device switching speeds of tens of megahertz is now possible. Increased switching stresses and losses accompany the higher switching frequency. Furthermore, the presence of leakage inductances in the transformer and junction capacitances in the semiconductor devices causes the power devices to inductively turn off and capacitively turn on. As the semiconductor device switches off an inductive load, voltage spikes are induced by the sharp di/dt across the leakage inductances, resulting in increased voltage spikes and noises. On the other hand, when the switch turns on at a high voltage level, the energy stored in the device's output capacitance, $0.5CV^2$, is dissipated internally when the device is switched on. Furthermore, turn on at high voltage levels induces a severe switching noise through the Miller capacitor coupled into the drive circuit, which leads to significant noise and instability in the drive circuit. The detrimental effects of parasitic elements become more pronounced as the switching frequency is increased.

This work was supported by Virginia Power Electronics Center (VPEC) - Industry Partnership Program and Center for Innovative Technology

To improve switching behavior of semiconductor devices in power processing circuits, two techniques were proposed. The first is the **zero-current-switching** (ZCS) technique. The concept of resonant switches was introduced [1-7]. By incorporating an LC resonant circuit, the current waveform of the switching device is forced to oscillate in a quasi-sinusoidal manner, therefore, creating zero-current-switching conditions during both turn on and turn off. By simply replacing the power switch(es) in PWM converters with the proposed resonant switch, a family of quasi-resonant converters (QRCs) has been derived. This new family of circuits can be viewed as a hybrid of PWM and resonant converters. QRCs utilize the principle of inductive or capacitive energy storage and transfer in a manner similar to PWM converters, and their circuit topologies also resemble those of PWM converters. However, LC tank circuit is always present near the power switch and is used not only to shape the current and voltage waveforms of the power switch but, also, to store and transfer energy from the input to the output in a manner similar to the conventional resonant converters. For off-line as well as dc-dc converter applications, the zero-current-switching technique is very effective up to 1-2 MHz, since it can eliminate turn-off switching loss and switching stresses. Employing the zero-current switching technique, several off-line converter topologies have been successfully implemented achieving a power density of 25 W/in^3. [8-10] However, to operate the semiconductor switches above one megahertz, the capacitive turn-on loss associated with the discharging of energy stored in the parasitic junction capacitance of the MOSFET becomes the primary limiting factor. Furthermore, the Miller effect related to turn on of the transistor at non zero voltage and parasitic oscillations caused by the transistor's output capacitance and circuit parasitic inductance often results in uncontrolled noise and EMI.

The second technique proposed is **zero-voltage-switching** (ZVS) [1, 11]. By using LC resonant network, the voltage waveform of the switching device can be shaped into a quasi-sine wave, such that zero-voltage conduction is created for the switch to turn on and turn off without incurring any switching loss. This technique eliminates the turn-on loss associated with the parasitic junction capacitances. [12-16]. Practical and quasi-resonant-converter circuits operating in frequencies up to 10MHz have been implemented. [12-16] However, ZVS-QRCs have two major limitations. One problem is excessive voltage stress to the switching transistor [12, 17] which is proportional to the load range [12]. This makes it difficult to implement ZVS-QRCs with wide load variations. Another problem is caused by the junction capacitance of the rectifying diode. When the diode turns off, this capacitance oscillates with the resonant inductance. If damped, this oscillation causes significant power dissipations at high frequencies, while if undamped, they adversely affect the voltage gain of the converter, and, thus, the stability of the closed loop system [17-19].

A novel, multi-resonant switch concept was proposed [26-27] to overcome the problems of QRCs. The unique arrangement of multi-resonant network results in absorption of all major parasitic components, including transistor output capacitance, diode junction capacitance and transformer leakage inductances and winding capacitances in the resonant circuit. This allows the new converters to provide favorable switching conditions for all devices. Experimental results indicate that the new family of ZVS multi-resonant converters (MRCs) are capable of high-frequency operation and with improved efficiency over that of QRCs.

The fundamental characteristics of the zero-current and zero-voltage-switching techniques and the basic structure of the zero-voltage-switched circuit are discussed in this paper. In Sec. 2, the concepts of the ZC resonant switch and ZV resonant switch are discussed. Employing the resonant switch concept, a large class of

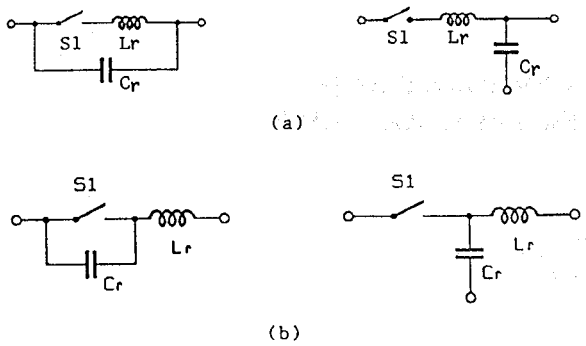

Fig. 1 *(a) ZC resonant switches*
(b) ZV resonant switches

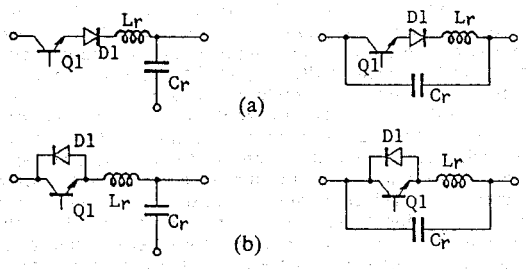

Fig. 2 *Resonant switch configurations*
(a) half-wave configurations
(b) full-wave configurations

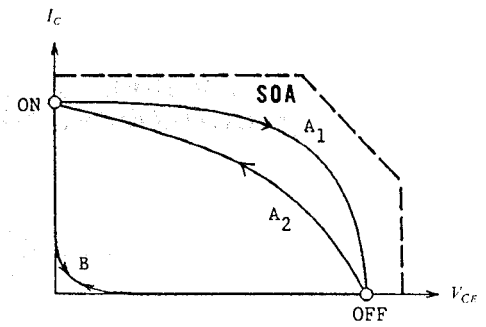

Fig. 3 *Switching load line trajectory*
(a) conventional PWM switching
(b) ZC resonant switching

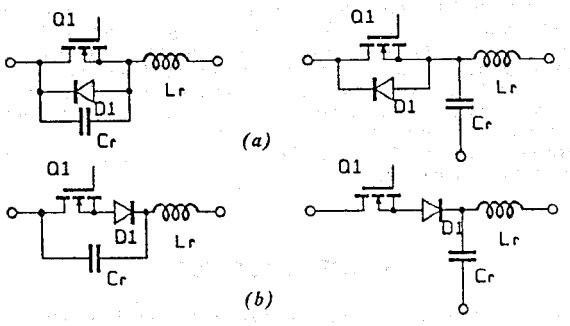

Fig. 4 *Voltage-mode resonant switches*
(a) half-wave mode implementation
(b) full-wave mode implementation

QRCs can be generated. The circuit's operating principles of ZCS-QRCs are described in Sec. 3. Similarly, ZVS-QRCs are discussed in Sec. 4. In Sec. 5, merits and demerits of the two families of QRCs are assessed. The concept of multi-resonant switch and multi-resonant converters are introduced in Sec. 6. The performances of sample breadboard of flyback ZVS- and ZCS-QRCs and forward ZVS-QRCs are presented in Sec. 7.

II. RESONANT SWITCH AND QUASI-RESONANT CONVERTERS

2.1 Resonant Switches

A resonant switch represents a subcircuit consisting of semiconductor switch, S_1, and resonant elements, L_r and C_r. For a ZC resonant switch, as shown in Fig. 1a, inductor L_r is in series with switch S_1 to achieve zero-current switching. In a ZV resonant switch, as shown in Fig. 1b, capacitor C_r is in parallel with switch S_1 to achieve zero-voltage switching.

(a) ZC Resonant Switches [2]

If the ideal switch, S_1, is implemented by a unidirectional switch in Fig. 2(a), the resonant switch is confined to operate in a **half-wave mode,** in the sense that the switch current is permitted to resonant only in the positive half cycle. On the other hand, if diode D_1 is connected in antiparallel with Q_1, as shown in Fig. 2(b), the switch current can flow bidirectional and the resonant switch now operates in **full-wave mode.**

In essence, the resonant LC circuit is used to shape the current waveform through switch S_1. At turn on, the device voltage, V_{ce} or V_{ds} can be driven into saturation before the current slowly rises. Current through switch S_1 will oscillates, because of the resonance between L_r and C_r, thus, allowing switch S_1 to be naturally commutated.

The load line trajectory of PWM switching behavior, shown as trajectory A in Fig. 3, traverses across the high-stress region in which the device is subjected to simultaneous high voltage and high current, whereas the load line trajectory of a resonant switch, shown as trajectory B, moves along the axes. Since no simultaneous high voltage and high current are exerted on the switch device, the switching stresses and losses are minimal.

(b) ZV Resonant Switches [9]

As in the case of a ZV resonant switch, the structure of S_1 determines the operation mode of the ZV resonant switch. If ideal switch S_1 is implemented by a transistor, Q_1, and an antiparallel diode, D_1, as shown in Fig. 4(a), the voltage across capacitor C_r is clamped by D_1 at zero during the negative half of the resonant cycle. The resonant switch is operating in half-wave mode. On the other hand, if S_1 is implemented by Q_1 in series with D_1, as shown in Fig. 4(b), and the voltage across C_r can oscillate freely, then the resonant switch is operating in a full-wave mode.

2.2 A New Family of Quasi-Resonant Converters

The concept of a resonant switch can be directly applied to a large number of conventional PWM converters. Simply by replacing the power switch(es) of a PWM converter with the ZC resonant switch, new families of ZCS-QRCs and ZVS-QRCs were derived. Many topological variations of QRCs were developed using the basic concept of ZC and ZV resonant switches described above. They were presented in Ref. [20-22].

III. ZERO-CURRENT-SWITCHED QUASI-RESONANT CONVERTERS (ZCS-QRCS)

3.1 Principle of Operation [3]

A buck quasi-resonant converter, as shown in Fig. 5(a), is employed to described the principle of operation. To facilitate discussion it is assumed that

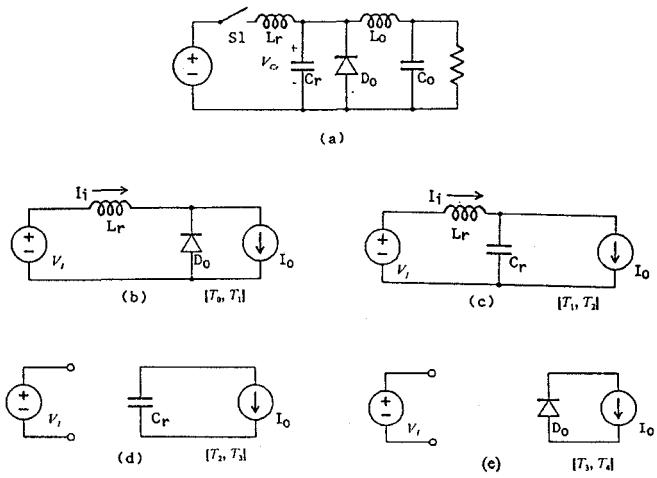

Fig. 5 *Buck quasi-resonant converter and it's equivalent circuits during four stages of a switching cycle*

- $L_o >> L_r$ and the
- Output filter $L_o - C_o$ and the load are treated as a constant current sink.
- Reactive elements of the tank circuit are ideal.

The following variables are defined:

- Characteristics impedance $Zn \equiv \sqrt{L_r/C_r}$
- Resonant angular frequency $\omega \equiv 1/\sqrt{L_r C_r}$
- Resonant frequency $fn \equiv \omega/2\pi$
- Nomalized load $r \equiv R < Zn$

A switching cycle can be divided into four stages. Their equivalent circuits are shown in Fig. 5. Suppose that before S_1 is turned on, diode D_0 carries the output current I_0, and capacitor voltage Vc_r is clamped at zero.

(1) **Inductor charging stage** $[T_0, T_1]$ (Fig. 7b)
At the beginning of a switching cycle, $t = T_0$, S_1 is switched on input current I_i rises linearly. The equivalent circuit is shown in Fig. 5b. At the beginning of a switching cycle, $t = T_0$, S_1 is switched on.

(2) **Resonant stage** $[T_1, T_2]$

At time T_1 when the input current rises to the level of I_2, D_2 is commutated off. The amount of current $I_i(t) - I_0$ is now charging Vc_r as can be seen from Fig. 5c.

If a half-wave resonant switch is used, switch Q_1 will be naturally commutated at time T_a when the resonating input current I_i(t) reduces to zero, as shown in Fig. 6a. On the other hand, if a full-wave resonant switch is used, current I_i (t) will continue to oscillate and feed energy back to source V_i through the antiparallel diode D_1, as shown in Fig. 6b. Current through D_1 again oscillates to zero at time T_b.

(3) **Capacitor discharging stage** $[T_2, T_3]$
Since switch S_1 is off at time T_2, C_r begins to discharge through the output loop and Vc_r drops linearly to zero at time T_3, as shown in Figs. 6a and 6b.

(4) **Freewheeling stage** $[T_3, T_4]$

This occurs after the charge output current stored in Cr is depleted through diode D_0. The equivalent circuit is shown as Fig. 5e.

Typical circuit waveforms, as shown in Figs. 6a and 6b, clearly demonstrate the zero-current switching property.

3.2 DC Voltage-Conversion Ratio

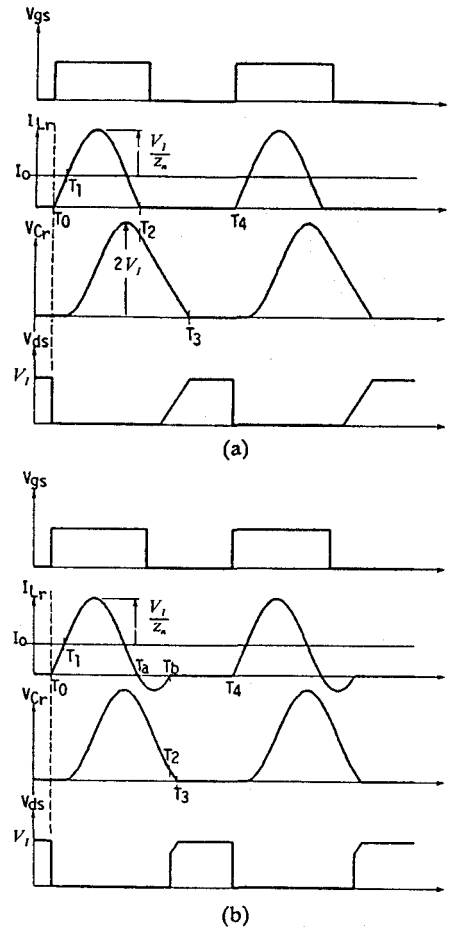

Fig. 6 *Waveforms of the buck resonant converter (a) half-wave mode (b) full-wave mode*

Output voltage V_o can be solved by equating input energy per cycle, E_i, and output energy per cycle, E_o.[2,3]

Voltage-conversion ratios for the buck resonant converter are plotted in Figs. 7a and Fig. 7b for the half-wave mode and full-wave mode, respectively. It can be seen that the voltage-conversion ratio in the half-wave mode is very sensitive to load variation while in the full-wave mode, the voltage-conversion ratio is almost independent of load variation. This can be understood by examining the waveforms of I_i and Vc_r in Fig. 8, under heavy load. Since I_i is offset by a large amount of I_0, the negative portion, which is the current flowing through D_1, is small. When the load is light, I_i is offset by a small amount of I_0 and the reverse current through D_1 is increased. This behavior can be simply stated in the following: as the power switch is turned on, energy is transferred from the source to the resonant tank. When the load demand is light, a large portion of the tank energy is returned to the source. When the load is heavy, most of the tank energy is transferred to the load and only a small portion of that tank energy is returned to the source. Consequently, the antiparallel diode regulates the tank energy such that the voltage-conversion ratio remains constant as the load is varying. For the half-wave mode, the excessive tank energy cannot be returned to the source when the load demand is reduced. Consequently, the operating frequency has to be reduced to regulate the output voltage. A more rigorous discussion of this is given in [3].

It should be noted that the characteristic shown in Fig. 7(b) is exactly the same as that of the PWM buck converter provided that the horizontal axis is replaced by the duty-cycle ratio. This conclusion can be extended to other converter topologies as well. This simply implies that the QRCs operating in full-wave mode have the same desired dc conversion characteristics and small-signal transfer function [31] as their PWM counterparts, while capable of achieving zero-current turn on and zero-current turn off.

When examining the current waveform, I_i, of Fig. 8, it is important to note that I_i contains a dc component of I_0 and an ac component of

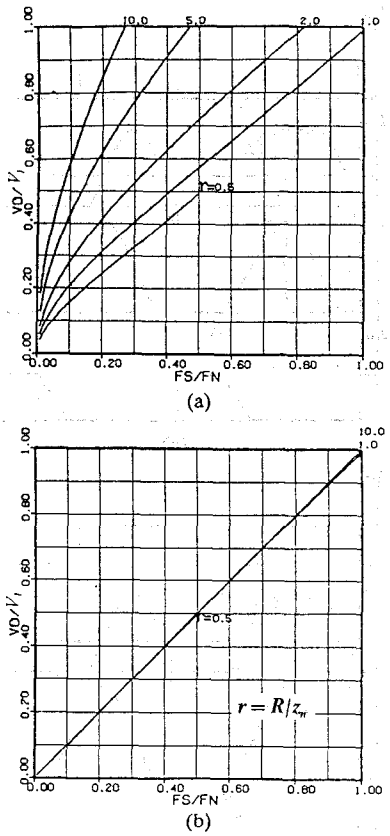

Fig. 7 *Dc voltage-conversion ratio for the buck resonant converter (a) half-wave mode (b) full-wave mode*

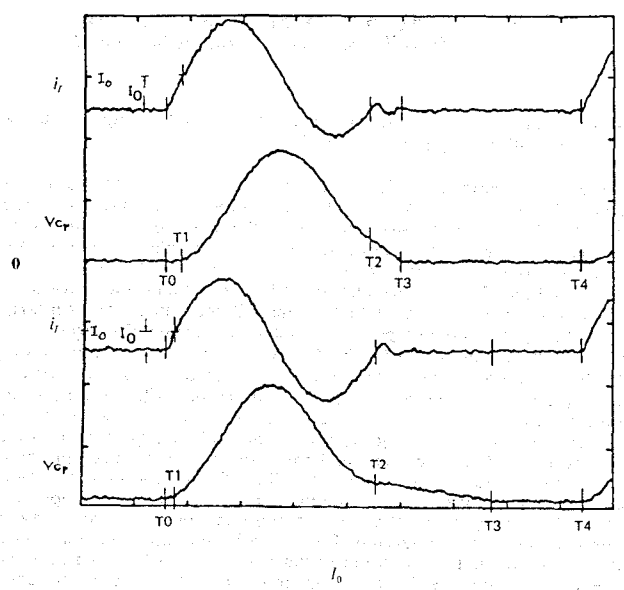

Fig. 8 *Waveforms of the buck resonant converter upper waveforms: heavy load lower waveforms: light load*

Vs/Z_n. The ac component is fixed for a given input, and characteristic impedance Z_n and dc component I_0 are simply the load. To maintain an ac component greater than the dc component, an upper bound

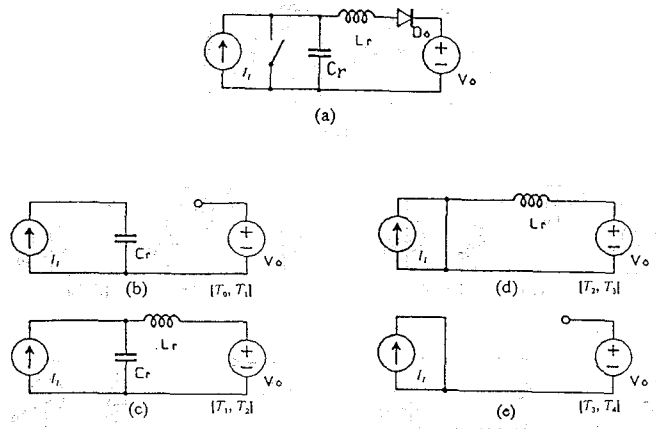

Fig. 9 *Simplified circuit for boost ZVS-QRC and it's equivalent circuits during the four stages of a switching cycle*

exists on the load current above which the zero-current switching property will be lost.

$$I_0 \leq V_s/Z_n$$

IV. ZERO-VOLTAGE-SWITCHED QUASI-RESONANT CONVERTERS (ZVS-QRCs)

One of the fundamental limitations of ZCS-QRCs for very high-frequency operation is the problem of capacitive turn-on loss, whereas this technology is free of turn-off switching losses. The energy stored in the device's output capacitance, $0.5CV^2$, during the off-state is dissipated inside the device when the device is switched on. At high input voltage, the capacitive turn-on loss is significant and the dv/dt during turn on further introduces a severe switching noise through the Miller capacitor which is coupled into the drive circuit.

While not severe in lower switching frequencies, the capacitive turn-on loss becomes the dominating factor when the switching frequency is raised to the megahertz range. For example, a junction capacitance of 100pF, switching at 300V, will induce a turn-on loss of 4.5 watts at 1MHz and 22.5 watts at 5MHz,

The zero-voltage switching technology is proposed to alleviate the losses during turn on, thus, enabling the quasi-resonant converters to operate at a much higher frequency.

4.1 Principle of Operation

A boost ZVS-QRC is used, as shown in Fig. 9, to illustrate circuit operation [11]. For simplicity, the converter is treated as a constant current source, I_i, suppling power to a constant voltage sink, V_o.

In steady-state operation, a complete switching cycle can be divided into four stages starting from the moment S_1 turns off. Suppose, before S_1 is turned off, it carries the input current, I_i. Diode D_0 is off and no current is flowing into the voltage load, V_o. At time T_o, S_1 turns off, input current I_i is diverted into capacitor C_r. The following description summarizes the circuit operation during each of the four stages.

(1) Capacitor charging stage $[T_o, T_1]$
S_1 turns off at T_o. Current I_i flows into C_r; the voltage across C_r, V_{Cr}, rises linearly. At time T_1, V_{Cr} reaches V_o and diode D_0 conducts. The equivalent circuit of this stage is shown in Fig. 9(b).

(2) Resonant stage $[T_1, T_2]$:
As D_0 turns on at T_1, a portion of I_i starts to flow into V_o.

In the half-wave mode of operation when V_{Cr} drops to zero at T_a (Fig. 10a), it is clamped at the zero value by the antiparallel diode, D_1, which carries the reverse current. While in full-wave mode, V_{Cr} continues to oscillate to a negative value and return to zero at time T_b. For half-wave mode, the end of this stage, T_2, is equal to T_a while for full-wave mode, it is equal to T_b. The equivalent circuit of this stage is shown in Fig. 9c. The waveforms for half-wave mode and full-wave mode can be seen in Fig. 10a and 10b, respectively.

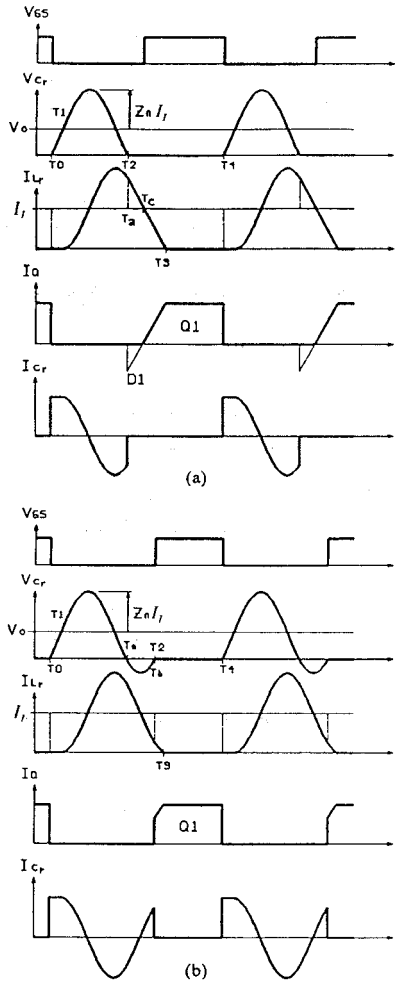

Fig. 10 *Typical circuit waveforms of the voltage-mode quasi-resonant boost converter in (a) half-wave mode (b) full-wave mode*

(3) Inductor Discharging State [T_2,T_3]

After T_2, current I_{Lr} drops linearly and reaches zero at time T_3. The equivalent circuit of this stage is shown in Fig. 9d.

Normally, in the half-wave mode of operation, transistor Q_1 shall turn on after V_{Cr} drops to zero at T_a and before the current through D_1 drops to zero at T_c . Otherwise, V_{Cr} will begin to recharge and Q_1 will lose the opportunity to turn on under the zero-voltage condition. In the full-wave mode of operation, Q_1 shall turn on between T_a and T_b, when diode D_1 is blocking the negative voltage.

(4) Free-Wheeling Stage [T_3, T_4]:

At T_3, the entire input current I_i flows through Q_1 . I_{Q1} remains constant until Q_1 turns off at T_4. Detailed analysis of the circuit is presented in [11].

Notice that the voltage waveform of V_{Cr} contains a dc component of V_o and an ac component of Z_nI_i. Since I_i is in proportion to the load current when V_o and V_i are fixed, the peak value of V_{Cr} increases as the load current is increased. Furthermore, to maintain a larger ac component than dc component, a lower bound on load current exists below which the zero-voltage switching property will be lost. The waveform of the current through Q_1 is somewhat square, and its peak value is the same as that of I_i. This results in a lower rms value of the switch current and the conduction loss is kept minimal.

4.2 DC Voltage-Conversion Ratio

The dc voltage-conversion ratio, V_o/V_i, as a function of load resistance and switching frequency, for the boost ZVS-QRC is plotted in Figs. 11a

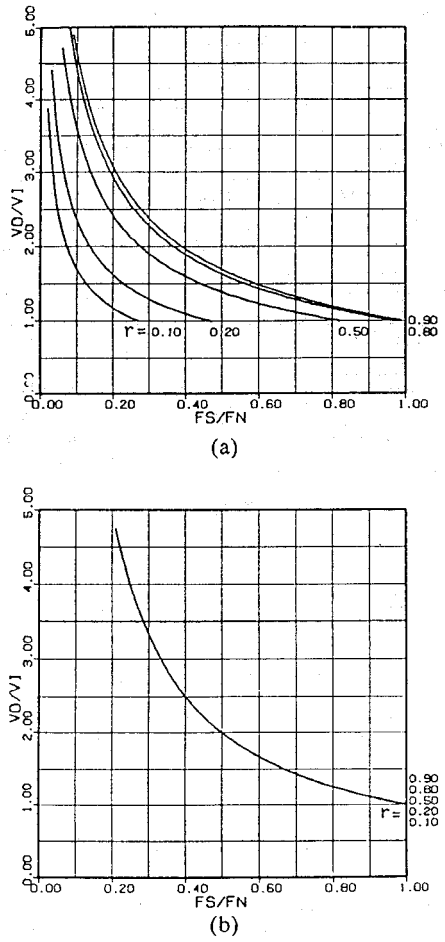

Fig. 11 *DC voltage-conversion ratios of the voltage-mode quasi-resonant boost converter in (a) half-wave mode (b) full-wave mode*

and 11b for half-wave mode and full-wave mode, respectively. It can be seen that the voltage-conversion ratio in full-wave mode is insensitive to load variation and is certainly more desirable. However, for full-wave mode, as shown in Fig. 4b, a series diode is required to provide a reverse-voltage blocking capability. Consequently, the energy stored in the junction capacitances of the semiconductor switch is trapped during off-time and is dissipated internally after the switch turns on. Therefore, full-wave mode suffers from capacitive turn-on losses and dv/dt noise, do are ZCS-QRCs, and is not practical for very high-frequency operation.

V. COMPARISON OF ZCS-QRC AND ZVS-QRC

5.1 Duality Relationship

It has been shown that a duality relationship exists between ZCS-QRCs and ZVS-QRCs [1, 11]. For example, the boost ZVS-QRC is the dual network of the buck ZCS-QRC. A comparison of the waveforms shown in Fig. 6 and 10, clearly displays the duality relationship between them. In fact, the dual properties between them are true both qualitatively, and quantitatively. For example, the voltage-conversion ratio of the boost ZVS-QRC can be derived from that of the buck ZCS-QRC simply by applying the duality principle.
The duality relationships also exist between any given converter in the ZCS-QRC family and its counterpart in the ZVS-QRC family.

Table 1 summarizes the major characteristics of the zero-current switching and zero-voltage switching techniques.

5.2 Assessment of ZCS-QRCs and ZVS-QRCs.

Fig. 12 shows the equivalent circuits of zero-current and zero-voltage quasi-resonant switches [26]. Each of these topologies represents a

	Zero-Current Switching	*Zero-Voltage Switching*
Control	*constant on-time*	*constant off-time*
Switch voltage waveform	*quasi-square*	*quasi-sinusoidal*
Switch current waveform	*quasi-sinusoidal*	*quasi-square*
Load range	*[Rmin, R∞]*	*[0, Rmax]*
Vo/Vi increases as	*fs increases*	*fs decreases*
Vo/Vi increases as	*Ro increases*	*Ro increases*
Full-wave mode	*D1 in antiparallel with Q1*	*D1 in series with Q1*
Half-wave mode	*D1 in series with Q1*	*D1 in antiparallel with Q1*

Table 1

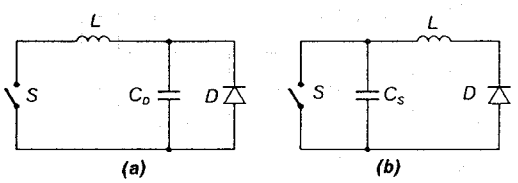

Fig. 12 *Quasi-resonant switches (a) zero-current, (b) zero-voltage*

high-frequency subcircuit extracted from a quasi-resonant converter by replacing voltage sources and filter capacitors with short circuits, and filter inductors with open circuits [32]. In the equivalent circuit of the zero-current quasi-resonant switch, shown in Fig. 12a, the active switch operates in series with the resonant inductor while the diode operates in parallel with the resonant capacitor. In the zero-voltage quasi-resonant switch, shown in Fig. 12b, the situation is opposite. The active switch is in parallel with the capacitor and the diode is in series with the inductor. It can be easily seen that the two topologies are dual. To facilitate comparison of ZCS-QRCs and ZVS-QRCs, the circuit diagrams and key waveforms of a simple buck ZCS-QRC and a buck ZVS-QRC are shown in Fig. 13 and 14. Antiparallel diode Ds in Fig. 13 represent the body diode of a MOSFET which is typically used as a high-frequency switch. However, reverse recovery of the MOSFET'S body diode causes harmful oscillation. Therefore, it is necessary to add a diode in series with S to prevent the current from flowing into Ds. The resulting half-wave mode of operation [2] not only increases conduction losses, but also makes the converter load-sensitive [3]. The minimum switching frequency at light load is reduced substantially and leads to larger filter components and slower transient response.

Although ZCS-QRCs take advantage of zero-current turn off, turn on occurs when full input voltage is applied to the switch. This causes dissipation of the energy stored in the output capacitance of the switch and dv/dt noise which is coupled through the drain-to-gate capacitance of the power MOSFET to the gate-drive circuit (switching Miller effect).

In ZCS-QRCs, the switching conditions for the active device are not most favorable, however, switching conditions for the rectifying diode are very desirable. Power diodes are easy to turn on, but the reverse recovery characteristics often result in excessive turn-off loss and noise. The most favorable condition to turn off a diode occurs when current reduces gradually to zero and no immediate reverse voltage is applied to the diode afterwards. This is the case for ZCS-QRCs. When S is turned on, the current through D decreases linearly until it reaches zero. Then the diode turns off and the voltage across it builds up gradually in a resonant fashion. The only disadvantage is that the reverse voltage applied across the diode is twice the input voltage. The maximum switching frequency of ZCS-QRCs is limited by the turn-on switching loss in the active switch. For ZVS-QRC technology as shown in Fig. 14, it can be seen that the active switch operates under favorable switching conditions. At turn off, the current is diverted from the switch into the resonant capacitor which is,

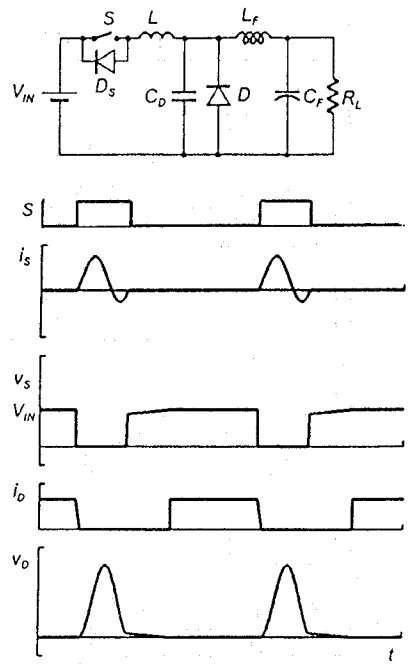

Fig. 13 *Circuit diagram and theoretical waveforms of buck ZCS-QRC.*

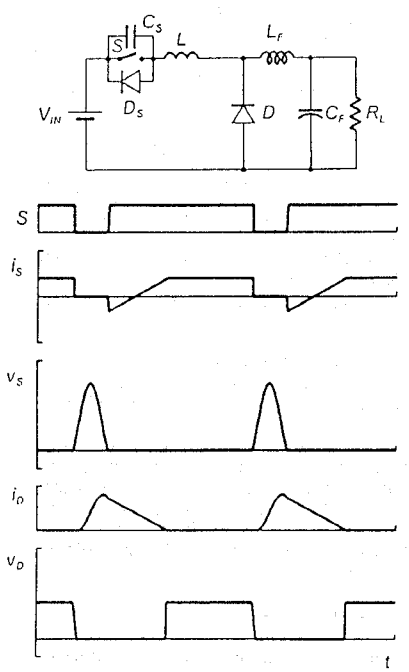

Fig. 14 *Circuit diagram and theoretical waveforms of buck ZVS-QRC.*

subsequently, being charged linearly to the input voltage by the load current flowing through L and Lf. The gradual increase of Vs minimizes overlapping of the switch current and voltage at turn off, thus, reducing the switching losses. The turn-on condition totally eliminates the capacitive turn-on losses and the switching Miller effect associated with ZCS-QRCs.

Improved switching conditions for the active switch allow ZVS-QRCs to operate at 10MHz [12]. However, the operation of ZVS-QRCs is adversely affected by the undesired switching conditions created for the rectifying diode. From Fig. 15, it can be seen that immediately after the diode current reduces to zero, voltage applied to the diode changes abruptly from zero to V_{IN}. In practice, such an abrupt voltage change induces parasitic oscillations between the resonant inductor and diode capacitance, as illustrated in Fig. 15. During conduction of

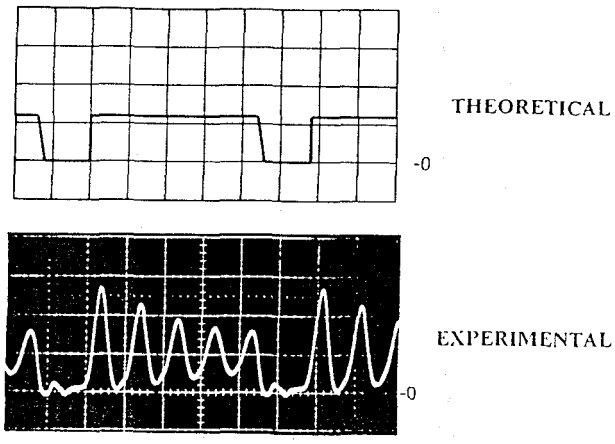

Fig. 15 *Theoretical and experimental voltage waveform of the rectifying diode in ZVS-QRCs.*

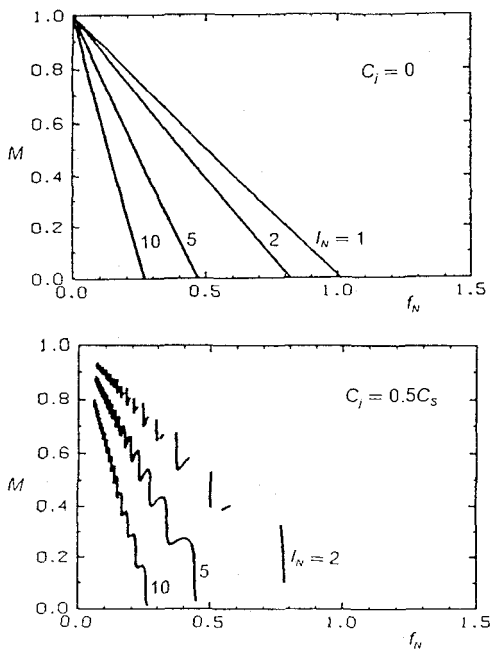

Fig. 16 *Effect of parasitic junction capacitance C_j of rectifying diode on the dc conversion ratio characteristics of buck ZVS-QRC: (a) ideal characteristics at $C_j = 0$, (b) characteristics at $C_j = 0.5C_s$.*

S, the current through the switch and voltage across the diode is oscillatory. The undesired oscillation adversely affects the conversion ratio characteristics. Fig. 16 shows conversion ratio $M = V_O/V_{IN}$ vs. normalized frequency $f_n = f/f_s$, where $f_s = 1/(2\pi\sqrt{L/C_S})$, with normalized output current $I_N = I_O/\sqrt{L/C_S}/V_{IN}$ as a free running parameter. When junction capacitance C_j of the rectifying diode is assumed zero, the characteristics are shown as straight lines in Fig. 16(a). Fig. 16(b) shows characteristics for $C_j/0.5C_s$. It can be seen that even if C_j is only half of the resonant capacitance, its effects are quite pronounced (in high-frequency converters C_j can easily be larger than C_S, especially if high-current diodes with large die areas are used). The discontinuity of the characteristics implies that the zero-voltage-switching property is lost for some operating conditions. Furthermore, in regions where the slopes of the curves are positive, the converter exhibits local closed-loop instabilities [19]. Even in those regions where the slopes are negative, the slope can be very steep which makes the conversion ratio very sensitive to the switching frequency and, thus, difficult to control.

Another important concern of ZVS-QRCs is extensive voltage stress at the switching transistor. Typically, this stress is proportional to the load range. For example, in a buck ZVS-QRC, this stress is $V_{Smax} = V_{IN}(1 + R_{Lmax}/R_{Lmin})$ [12]. Thus, for a load range of 10:1, voltage stress is 11 times the input voltage. This virtually eliminates the use of single-ended configurations for off-line applications.

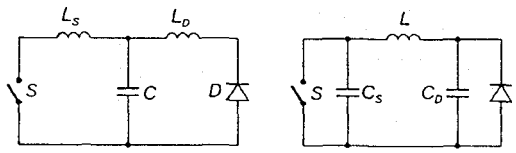

Fig. 17 *Multi-resonant switches (a) zero-current (b) zero-voltage*

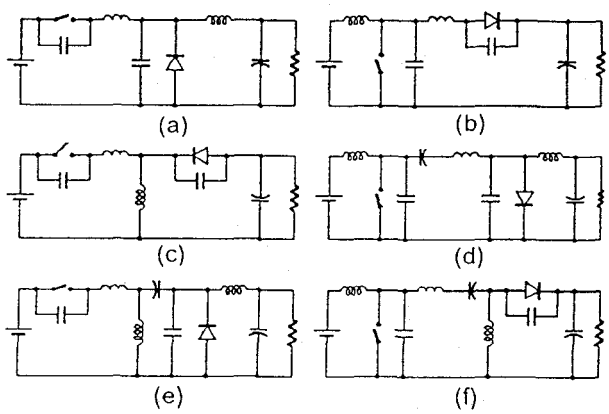

Fig. 18 *Six basic topologies of ZVS-MRCs: (a) buck (b) boost (c) buck-boost (d) Cuk, (e) Zeta (f) SEPIC*

In the above discussion, it has been shown the ZCS and ZVS quasi-resonant techniques optimize switching conditions for either the active switch or the diode, but not for both simultaneously. Furthermore, each application is limited primarily by the undesired parasitic oscillations in the circuit. The ZCS-QRCs are adversely affected by the body diode and output capacitance of the power MOSFET, while ZVS-QRCs deteriorate due to the junction capacitance of the rectifying diode.

VI. MULTI-RESONANT CONVERTERS

6.1 Multi-Resonant Switch Concept

The zero-current and zero-voltage resonant-switch concepts were originally developed to provide improved switching conditions for the *active* switch. Examination of Fig. 12(a) and 12(b) reveals that zero-current configuration for the active switch is zero-voltage configuration for the diode and *vice versa*. As mentioned previously, each quasi-resonant network creates favorable switching conditions for either the active switch or the diode, but not both.

The basic idea of multi-resonant switches [26] is to extend the resonant-switch concept to both active switch and diode. Figure 17 shows the two simplest multi-resonant switches. In the zero-current multi-resonant switch, shown in Fig. 17(a), the resonant circuit is formed in a T-network with resonant inductors in series with the switching devices. In the zero-voltage multi-resonant switch, shown in Fig. 17(b), the resonant circuit is formed in a π -network with resonant capacitors connected in parallel with the switches. It can be seen easily that the two networks are dual. During operation of a multi-resonant converter, a multi-resonant switch forms three different resonant circuits depending on whether the active switch and diode are open or closed. This results in operation of the converter with three different resonant stages in one cycle of operation.

For high-frequency operation, the zero-voltage topology for Fig. 17(b) is advantageous. This topology absorbs parasitic output capacitance of the power FET and the junction capacitance of the rectifying diode and provides favorable switching conditions for *both* devices, as will be shown in a later section.

6.2 Multi-Resonant Converter

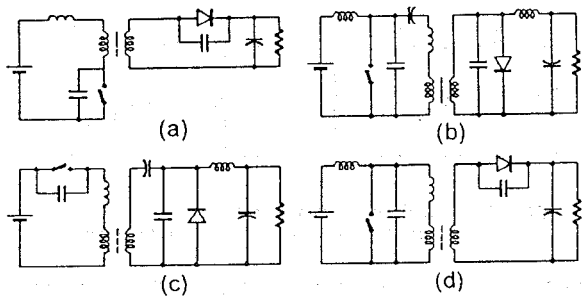

Fig. 19 *Basic isolated topologies of ZVS-MRCs*
(a) flyback *(b) Cuk*
(c) Zeta *(d) SEPIC*

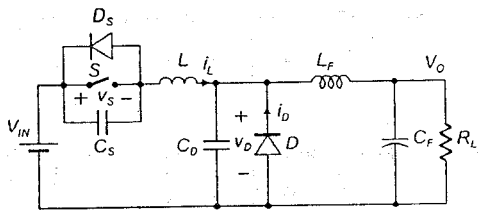

Fig. 20(a) Circuit diagram of buck ZVS-MRC

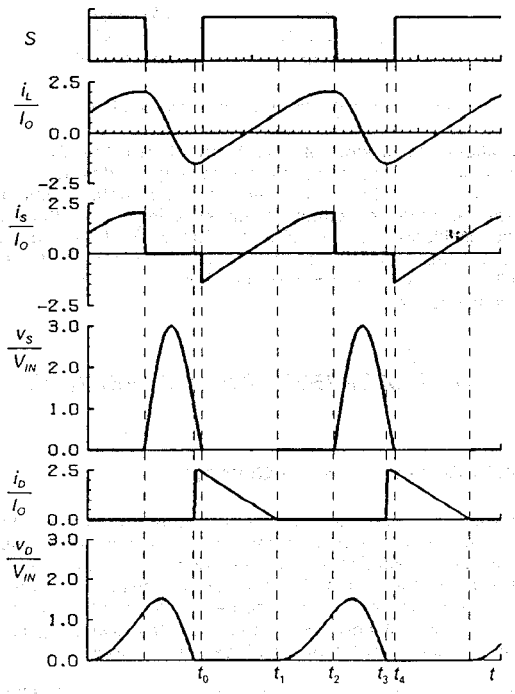

Fig. 20(b) Theoretical waveform of buck ZVS-MRC

The procedure for converting any PWM topology into a multi-resonant topology is straightforward and similar to that for QRCs. For example, to derive a ZVS-MRC from a PWM converter, the following steps are applied:

1. One resonant capacitor is placed in parallel with the active switch (uni- or bidirections),

2. Another resonant capacitor is placed in parallel with the rectifying diode,

3. An inductor is inserted in the loop containing the switch and the diode. This loop can also contain voltage sources and filter or blocking capacitors.

Applying the above rules to the six basic converter topologies, the corresponding ZVS-MRC topologies, shown in Fig. 18(a)-(f), are

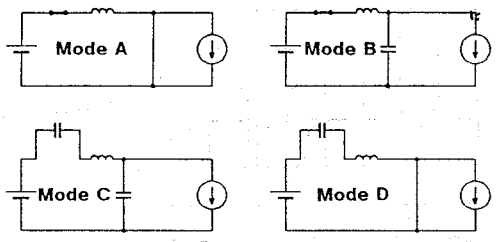

Fig. 21 *Topological modes of buck ZVS-MRC.*

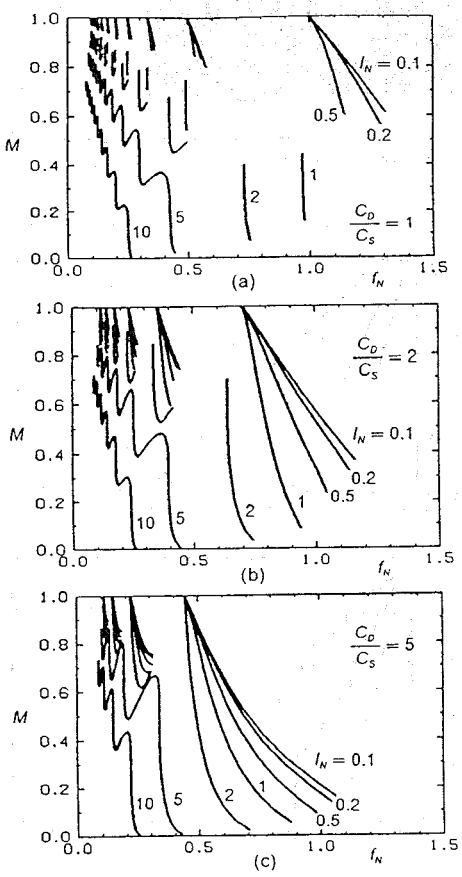

Fig. 22 *Effect of the ratio C_p/C_s on the conversion-ratio characteristics of buck ZVS-MRC*
(a) $C_p/C_s = 1$ *(b) $C_d/C_d = 2$*
(c) $C_p/C_s = 5$

obtained. In a similar manner, four isolated ZVS-MRC, shown in Fig. 19(a)-(d), are generated.

6.3 Principle of Operation

Although a large variety of MRCs exists, their operation and characteristics are similar. The buck ZVS-MRC topology is analyzed to gain insight in the operation and performance of ZVS-MRCs. Fig. 20 shows a circuit diagram of the converter and its typical waveforms.

During the switching cycle, the converter operates in four topological modes, shown in Figs. 21(a)-(d). The output-filter inductor is assumed to be sufficiently large to be replaced by current source I_O .

Topological Mode A [t_0, t_1]

This topology arises when the switch is conducting and the resonant-inductor current is less than I_O. This forces differential current $I_O - i_L$ to flow through rectifying diode D. The equivalent circuit during this stage is shown in Fig. 21a.

Topological Mode B [t_1, t_2]

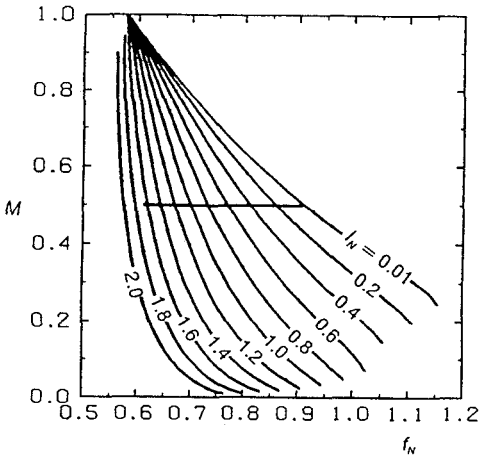

Fig. 23 *Operating-point loci for a buck ZVS-MRC with $M = 0.5$ and I_N varying from 0 to 1.66 superimposed on its dc conversion ratio characteristics*

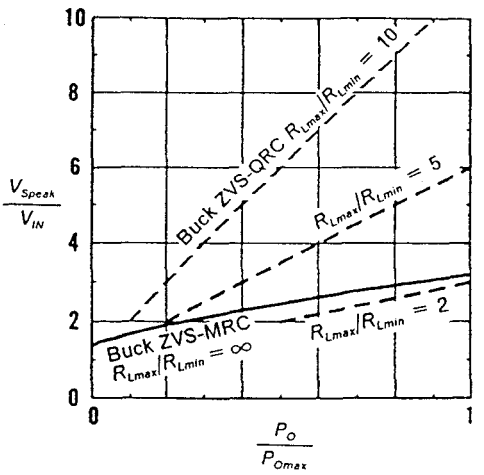

Fig. 24 *Comparison of transistor voltage stress in buck ZVS-QRC (dotted lines) and buck ZVS-MRC (solid line).*

When the resonant-inductor current reaches I_o, D turns off and the resonant of L and C_D begins. The stage ends when S is turned off.

Topological Mode C [t_2, t_3]

After S is turned off all three resonant components form a resonant circuit as shown in Fig. 21c.

Topological Mode D [t_3, t_4]

This stage begins when voltage v_D reduces to zero and diode D turns on.

The cycle is completed when v_S reduces to zero and S turns on starting Mode A.

Fig. 22(a) shows conversion-ratio characteristics, $M = V_o/V_{IN}$, for a converter with $C_D/C_S = 1$ [23]. For heavy loads, $I_N > 1$,, the characteristics are similar to those of a buck ZVS-QRC, as shown in Fig. 16(b). However, for lighter loads, $I_N \leq 1$, the characteristics are quite different. Although in a limited range, the ZVS-MRC achieves zero-voltage switching even for very light loads which is manifested by the presence of the characteristics for $I_N < 1$

When ratio C_D/C_S is increased, zero-voltage switching is achieved for a wider range of operating conditions, as shown in Fig. 22(b) and Fig. 22(c) for $C_D/C_S = 2$ and $C_D/C_S = 5$, respectively.

From Fig. 22, it can be seen if the switching frequency is limited to a certain range, it is possible to assure that the operating point is always

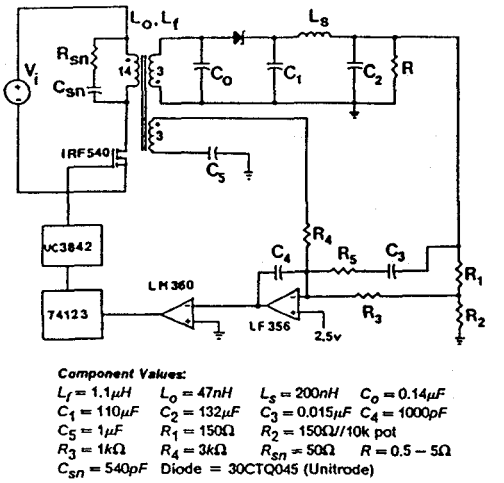

Component Values:

$L_f = 1.1\mu H$ $L_o = 47nH$ $L_s = 200nH$ $C_o = 0.14\mu F$
$C_1 = 110\mu F$ $C_2 = 132\mu F$ $C_3 = 0.015\mu F$ $C_4 = 1000pF$
$C_5 = 1\mu F$ $R_1 = 150\Omega$ $R_2 = 150\Omega$//10k pot
$R_3 = 1k\Omega$ $R_4 = 3k\Omega$ $R_{sn} = 50\Omega$ $R = 0.5 - 5\Omega$
$C_{sn} = 540pF$ Diode = 30CTQ045 (Unitrode)

Fig. 25(a) *Complete circuit diagram of full-wave flyback QRC with multi-loop control*

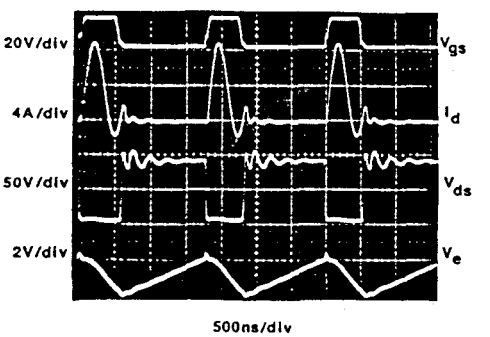

Fig. 25(b) *Circuit waveforms of full-wave flyback QRC (a) Full load (50W), High line (60V)*

1st Waveform - Gate Drive Signal
2nd Waveform - Drain Current
3rd Waveform - Drain-Source Voltage
4th Waveform - Error Voltage

within the region where the characteristics have a negative slope. This allows the ZVS-MRCs to overcome the instability found in ZVS-QRCs. For example, Fig. 23 shows dc conversion ratio characteristics have a negative slope. This allow the ZVS-MRCs to overcome the instability found in ZVS-QRCs. For example, Fig. 23 shows dc conversion ratio characteristics of a buck ZVS-MRCs with $C_D/C_S = 3$ for a limited range of switching frequency, $f_N > 0.5$. The line superimposed on the characteristics depicts the locus of the operating point for $M = 0.5$ and I_N varying from 0 to 1.66.

The low voltage stress with a very wide load range is one of the salient features of ZVS-MRCs. Fig. 24 shows typical normalized transistor voltage stresses in a buck ZVS-QRC (dotted lines) and a buck ZVS-MRC (solid line). The voltage stress in the quasi-resonant converter is proportional to the load range. For the converter with 10:1 load range (top dotted line), the voltage stress at full load is 11 times the input voltage. The multi-resonant converter achieves operation from no load to full load with the voltage stress only about three times the input voltage.

VII. PERFORMANCE COMPARISONS OF EXPERIMENTAL CIRCUITS

7.1 ZCS-QRC

A number of ZCS-QRCs have been built for various off-line power supplies as well as dc-dc converter applications [1, 3, 9, 10]. Due to

Table II
Flyback ZCS QRC Power Stage Performance
(IRF540)

Input Voltage (V)	Output Voltage (V)	Output Current (A)	Switching Frequency (kHz)	Output Ripple (mV)	Efficiency (%)
30	5.17	10.62	882	30	73.8
40	5.17	10.62	688	35	76.1
50	5.17	10.62	600	35	75.7
60	5.17	10.62	523	40	74.6
30	5.17	4.82	794	25	70.4
40	5.17	4.82	666	30	68.6
50	5.17	4.82	575	30	66.7
60	5.17	4.82	498	40	64.8
30	5.17	1.01	753	25	40.4
40	5.17	1.01	632	25	38.3
50	5.17	1.01	540	35	36.3
60	5.17	1.01	466	40	36.2

the inherent capacitive turn-on loss, switching noise due to dv/dt (Miller effect) and reverse recovery of diodes in the circuit, the maximum operating frequency of ZCS-QRCs is limited to 1-2 MHz for off-line applications.

A half-bridge, 300V, dc, off-line ZCS-QRC operating in both half-wave mode and full-wave mode was designed and fabricated in both breadboard and thick-film hybrid form [9, 10]. Using the leakage inductance of the transformer and secondary-side resonance, the circuit delivered 80W (5V/16A) at 78 percent efficiency with a power density of 21 W/cu.in. Other topologies such as forward and flyback ZCS-QRCs have also been breadboarded and results reported in [1] and [3]. A version of the forward ZCS-QRC operating in half-wave mode was reported earlier [8] and is available in various commercial and military off-line power supplies.

For ease of comparison, a flyback ZCS-QRC breadboard performance is presented here [23], so this circuit can be compared with a flyback ZVS-QRC and forward ZVS-MRC in the following section.

A flyback converter topology which utilizes the leakage inductance of the step-down transformer as the resonant element, L_r , is shown in Fig. 25(a). In addition, resonance capacitor C_r is placed across the secondary winding.

The converter specifications presented below are for a 50W distributed power supply, operating over an input voltage range from 30V to 60V. [23] A maximum switching frequency of 1 MHz was selected since above this frequency, the zero-current switching becomes less ideal and turn-on losses in the switch become significant.

Input Voltage:	30-60 Vdc
Output Voltage:	5.1 Vdc
Output Power:	5-50W
Output Noise:	50 mV p-p (maximum)
Maximum Frequency:	1MHz
Audiosusceptibility:	-50 dB (maximum, 0-1MHz)
Output Impedance:	60 mΩ (maximum, 0-1MHz)
Output Peaking load	50 mV (maximum), 1A step
Setting Time:	100 μs (maximum)

For a maximum switching frequency of 1MHz, the resonant frequency is 2MHz. The resonant inductor can be found [24] from

$$Z_O = \frac{R_{\min}}{M_{\max}} = \omega_o L_o$$

Hence, the resonant inductor, referred to the secondary is 47nH. (With a turns ratio of 5.1, this corresponds to a primary leakage inductance value of 1.17μH). To obtain the desired resonant frequency of 2MHz, the value of the resonant capacitor C_O is 0.14μF. With the values of L_O and C_O selected, the resonant tank design is complete.

The resonant inductor, filter inductor and transformer were constructed with a single magnetic element. A low profile core (TDK LP 22/8 H7C4) was used with a primary of 14 turns using #22 Litz wire, and 3 secondary turns of 5 mil copper foil. The primary leakage was 1μH, and the magnetizing inductance, referred to the primary, was 25.5 μH.

Table III
Flyback ZCS QRC Estimated Losses

Component	Estimated Loss (W)
FET (Conduction)	1.24
FET (Switching)	0.58
Snubber	2
Primary	1.74
Secondary	0.5
Core	0.6
C_O	1.88
Diode	6.4
C_1	2.17
L_S	0.1
C_2	0
Total	17.2
Measured	17.6

The magnetizing inductance for the output filter was obtained by gapping the core. With this design the maximum flux in the core was 0.3T, but the flux excursion on each cycle was only 30mT. The transformer core was thereby fully utilized with very small hysteresis losses.

The peak value of the resonant switch current, occurring at high-line and full-load was 9A. Table II summarizes the large-signal performance of the converter. At full load, the efficiency varied from 73.8% to 76.1%, and the frequency range was from 523kHz to 882kHz. At light load, the minimum frequency was 466kHz, and the efficiency was as low as 36.2%. One of the disadvantages of full-wave operation is the poor efficiency at light load since considerable energy is dissipated by circulating current. The efficiency for the half-wave mode of operation would be considerably higher at high load. However, the switching frequency for the half-wave mode of operation at 10% of the full load will reduced to about 100kHz. The trade-off is the comparatively narrow range of frequency of operation - from 466kHz to 882kHz - for a very wide line and load range.

Table III shows the estimated losses in each of the components for a nominal line of 50V and for full load. Detailed loss analysis of the flyback and other QRCs has been presented in [25]. These results were used together with SPICE simulations to estimate the losses in all of the circuit components.

7.2 ZVS-QRCs

The ZVS technique produces high voltage stress across the power switch(es). Therefore, single-ended topologies are not suitable for off-line applications. However, due to the reduced switching stresses, losses, and switching noises, the ZVS-QRCs are capable of operating at a higher frequency. The single-ended ZVS-QRCs are suited for high-density high-performance dc-dc conversion for telecommunication, automotive and on-board power supply applications. Certain ZVS-QRCs can be extended for off-line applications. These configurations usually employ more than one power switch. For example, a half-bridge ZVS-QRC has been built for this purpose [13]. The peak stress across the power switches is limited to the supply voltage in this configuration because the conduction of one switch automatically clamped the voltage across the off-switch at the magnitude of the supply voltage.

For the purpose of comparison with the flyback ZCS-QRC presented earlier, performance of a flyback ZVS-QRC breadboard is demonstrated here.

A flyback ZVS-QRC was breadboarded with the following specifications:

- output voltage $V_0 = 5V$.
- input voltage range $V_{IN} = 40 - 60V$.
- load resistance range $R_L = 1.25 - 5\Omega$.
- maximum switching frequency $f_{smax} = 13MHz$.

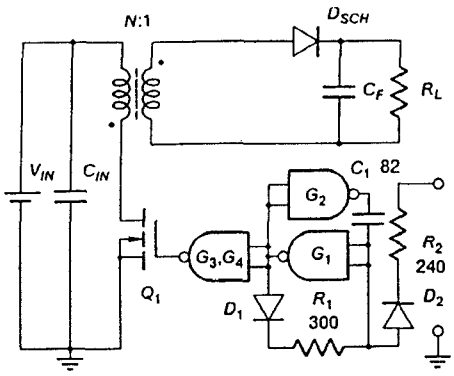

(a)

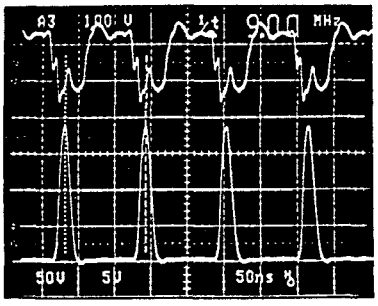

(b)

Q_1	:	*IRF720*
D_{SCH}	:	*2 x IR31DQ06*
C_{IN}	:	*0.1μ stack metal film capacitor,*
C_F	:	*3.3μF multilayer ceramic (Z5U) chip capacitor*
T_r	:	*6:1 turns on P14/8-A 160-H6F (primary - AWG#22, secondary - copper ribbon 5 mils thick, 160 mils wide).*

Fig. 26 *(a) Circuit diagram of the flyback ZVS-QRC*
(b) Gate-to-source voltage (top, 5V/div) and drain-to-source voltage (bottom, 50V/div) waveforms at $P_{out} = 10W$, $V_{IN} = 5V$. Time scale: 50ns/div.

The circuit diagram of the converter including gate drive and VCO is shown in Fig. 26.

There are no external components in the circuit. The resonant inductance is formed entirely by the intrinsic inductances of the circuit: the leakage inductance of the transformer and the lead inductances of D_{SCH}, C_{in} C_F, and the MOSFET. The total value of L_r (as seen at the primary side of the transformer) was estimated as 2.5μH. The resonant capacitor is formed by the transistor's output capacitance and the winding capacitance of the transformer. The total value of C_r was estimated as 40 pF. The characteristic impedance and resonant frequency are 250 Ω and 16 MHz, respectively. The slow-recovery body diode of the MOSFET can be used in the circuit to form a bidirectional switch. This is possible since immediately after the body diode is turned off, the MOSFET transistor is turned on, which shorts the body diode permitting the minority carries to recombine internally. The circuit is operated in an open-loop fashion. A 5V output is obtained by varying the switching frequency. When the output power is less than 5W, even through the output voltage still can be regulated, the ZVS property can no longer be achieved. Efficiency of the power stage is around 70% for medium and high loads. Efficiency will drop below 60% at light loads when the ZVS property is lost.

Typical experimental waveforms of gate-to-source voltage and drain-to-source voltage are shown in Fig. 26(b). Notice that the waveforms are clean (free of switching noise) at 9MHz. No Miller effect, switching induced dv/dt or di/dt is observed in this breadboard.

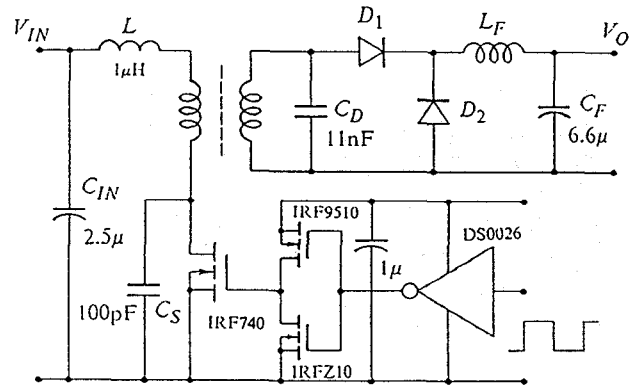

Fig. 27 *Circuit diagram of the experimental converter.*

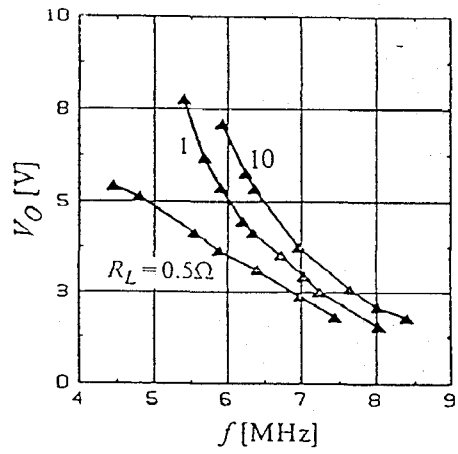

Fig. 28 *Measured output voltage vs. switching frequency of the forward ZVS-MRC at $V_{IN} = 50V$*

Consequently, the circuit is capable of operating at a switching frequency much higher than that of the ZCS-QRCs.

7.3 ZVS-MRCs

Three MRC topologies have been breadboarded. They are: non-isolated buck [26] and forward converters [27] for on-board applications and half-bridge converter [28] for off line application. These MRCs are operated generally at the frequency range of 2-8 MHz. A much higher frequency converter operating at 22 MHz has also been demonstrated by AT&T Bell Laboratories [29-30]. This modified Class-E converter operates in a way similar to MRCs discussed in the present paper and is considered for this paper the same family.

For the purpose of comparison with the two other converter circuits discussed previously, a ZVS-MR forward converter breadboard is presented here [27].

A 50-W forward ZVS-MRC was implemented with a 50-V input and a 5-V output voltage. A circuit diagram of the converter is shown in Fig. 27. The transformer with a 4:1 turns ratio had a core using 4C4 Ferroxcube Ni-Zn ferrite. Approximately one third of the resonant inductance was supplied by the leakage of the transformer. The remaining two thirds were supplied by an external inductor. The output capacitance of the IRF740 MOSFET provided approximately half of the required primary resonant capacitance. An external capacitance of 100pF was added in parallel with the MOSFET. One third of the secondary resonant capacitance was supplied by the junction capacitances of the Schottky rectifiers (28CPQ040). An external capacitance (NPO ceramic) was added in parallel with the rectifiers to obtain the required capacitance.

The converter operated at frequencies in excess of 5MHz. Experimental regulation characteristics at a 50V input voltage are

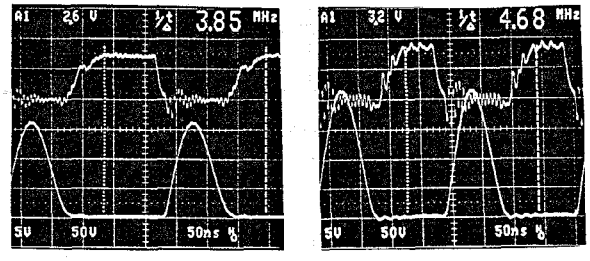

(a) $V_{IN} = 40V$ (b) $V_{IN} = 60V$

Fig. 29 *Gate-to-source and drain-to-source voltage waveforms at* $V_{OUT} = 5V$, $P_{OUT} = 50W$

shown in Fig. 28 for various load resistances. It can be seen that the converter achieves substantial range of the output voltage regulation for a wide load range with a relatively narrow switching frequency range. Zero-voltage turn on is maintained for all operating conditions.

Waveforms of the converter operating at full load with 40V input and 60V input are shown in Fig. 29(a)-(c). The maximum peak stress across the drain to source is slightly less than four times of the source voltage. This represents a considerable improvement over that of the ZVS-QRCs. Measurement results are shown in Table IV. At full load of 50W, the converter achieved an efficiency of 79.4%. At medium and light loads, the efficiency is reduced due to the circulating currents.

VIII. CONCLUSIONS

As the switching frequency is boosted into the megahertz range, the abrupt switching approach used in the conventional PWM converter encounters formidable difficulties. In particular, the switching stresses and losses, which are suppressed by means of snubber circuits or ignored at lower frequencies, become intolerable at high-frequency operations.

To alleviate switching stresses and losses, the concept of the resonant switch was introduced and implemented either in the form of zero-current switching (ZCS) or zero-voltage switching (ZVS). By direct application of the resonant switch(es) into PWM converters, a new family of quasi-resonant converters (QRCs) and multi-resonant converters (MRCs) has been discovered. These new families of converters with literally hundreds of topological variations can be viewed as hybrids of PWM and conventional resonant converters. They utilize the principles of inductive or capacities energy storage and transfer for power conversion in a fashion similar to PWM converters. However, a LC tank circuit is always presented in conjunction with the power switch(es) and is used not only to shape the current and voltage waveforms but, also, to store and transfer energy from input to output in a manner similar to the conventional resonant converters. For this reason, the QRCs and MRCs are regulated only with the use of a frequency modulation (FM) technique.

This family of QRCs can be divided into two classes. One class is referred to as ZCS-QRCs employing ZCS concept, and the other referred to as ZVS-QRCs employs the ZVS concept. ZCS-QRCs and ZVS-QRCs again can be subdivided into two categories: full-wave (FW) mode and half-wave (HW) mode, depending upon whether the power switch is unidirectional or bidirectional. It has been shown that the FW-QRCs are load insensitive. Therefore, the switching frequency is maintained constant as the load varies. However, the HW-QRCs, are load sensitive. As the load varies, the switching frequency has to be modulated over a wide range to maintain output-voltage regulation.

For off-line and distributed power applications and for switching frequencies up to 1MHz, the ZCS technique is effective since it eliminates the switching stresses and turn-off losses. This technique results in a switch current waveform which is quasi-sinusoidal and a switch voltage waveform which is quasi-square wave. Consequently, the device's voltage stress is minimum but its conduction loss is higher than that of PWM converters. To operate the semiconductor switches at a higher frequency, the capacitive turn-on loss associated with ZCS must be avoided.

To minimize the capacitive turn-on loss, the ZVS technique was proposed. This technique allows the power switches to turn on under zero-voltage condition and, therefore, eliminates the turn-on loss associated with the parasitic junction capacitances. Since the power

f	I_O	I_{IN}	P_O	P_{IN}	η
MHz	A	A	W	W	%
4.83	10	1.26	50	63.0	79.4
5.95	5	0.69	25	34.5	72.4
7.22	0	0.06	0	3.0	0.0

Table IV: Measurement results of forward ZVS-MRC at $V_{IN} = 50V$

switch is always turned on at zero-voltage, a simple capacitor snubber (in many cases, C_{ds} of the MOSFET) can be used to minimize turn-off loss and, thus, achieve a zero-voltage turn-off condition.

However, ZVS-QRCs suffer two major limitations. One difficulty is to implement ZVS-QRCs with wide load range while confirming the voltage stress across the switching transistors. Another difficulty is caused by the junction capacitance of the rectifying diode. Since the diode is operating under zero-current switching in this scheme, uncontrolled oscillation often occurs between the junction capacitance and transformer leakage inductance. This is due to the abrupt change of the voltage waveform across the rectifier diode. This oscillation generates considerable EMI noise and can adversely affect the converter loop stability.

A novel, multi-resonant switch concept was proposed to overcome the limitations of high-frequency quasi-resonant converters. A new family of zero-voltage-switching multi-resonant converters MRCs was generated. The new MRCs operate with favorable switching conditions for both the transistor and rectifying diode. Transistor voltage stress in ZVS-MRCs is significantly reduced compared to that in ZVS-QRCs, while the load range is dramatically improved. By limiting the switching frequency range. The ZVS-MRCs can avoid instability found in ZVS-QRCs caused by the parasitic oscillation between the junction capacitance of the rectifier and the resonant inductance. In fact, in ZVS-MRCs, the junction capacitance of the rectifier is used as a part of the resonant circuit that absorbs all major junction capacitance and transformer leakage inductance, the ZVS-MRCs are most suitable for high-density on-board and off-line power supplies operating above one megahertz. Several MRC breadboards have been built operating in multi-megahertz with their performances superior to that of QRCs.

REFERENCES

[1] K. Liu, "High Frequency Quasi-Resonant Converter Techniques", *Ph.D. Dissertation, Electrical Engineering Department, Virginia Polytechnic Institute and State University, 1986*

[2] K. Liu, F.C Lee, "Resonant Switches - A Unified Approach to Improve Performances of Switching Converters", *IEEE International Telecommunications Energy Conference*, pp. 334-341, 1984

[3] K. Liu, R. Oruganti and F.C. Lee, "Resonant Switches - Topologies and Characteristics", *IEEE PESC Record*, pp. 106-116, 1985

[4] E.J. Miller, "Resonant Switching Power Conversion", *IEEE PESC Record, pp. 206-122, 1976*

[5] E. Buchanan and E.J. Miller, "Resonant Switching Power Conversion Technique", *IEEE PESC Record*, pp. 188-193, 1975

[6] M. Jovanovic, K. Liu, R. Oruganti and F.C. Lee, "State-Plane Analysis of Quasi-Resonant Converters", *IEEE International Telecommunications Energy Conference*, pp. 235-242, 1985

[7] K. Liu and F.C. Lee, "Secondary-Side Resonant for High-Frequency Power Conversion", *IEEE Applied Power Electronics Conference. pp. 83-89, 1986*

[8] P. Vinciarelli, "Optimal Resetting of the Transformer's Core in Single-Ended Forward Converters," *U.S. Patent, 4,441,146* April 1984

[9] D.C. Hopkins, M.M. Jovanovic, F.C. Lee and F.W. Stephenson, "Two Megahertz Off-Line Hybridized Quasi-Resonant Converter," *IEEE APEC Proceeding, 1987*

[10] M.M. Jovanovic, D.C. Hopkins and F.C. Lee, "Design Aspects for High-Frequency Off-Line Quasi-Resonant Converters", *High Frequency Power Conversion Conference, Proceedings, 1987*

[11] K. Liu and F.C. Lee, "Zero-Voltage Switching Technique in DC/DC Converters," *IEEE PESC Record*, pp. 58-70, 1986

[12] W.A. Tabisz, P. Gradzki and F.C. Lee, "Zero-Voltage-Switched Quasi-Resonant Buck and Flyback Converters -- Experimental Results at 10MHz," *IEEE PESC Record, 1987*

[13] M.M. Jovanovic and F.C. Lee "Off-Line Zero-Voltage Quasi-Resonant Converter," *VPEC Seminar, 1987*

[14] R. Redl, B. Molnar, N.O. Sokal "Class E Resonant Regulated DC/DC Power Converters: Analysis of Operation and Experimental Results at 1.5 MHz," *IEEE PESC Record*, pp. 50-60, 1983, reprinted in *IEEE Trans. Power Electronics*, Vol. PE-1, No. 2, pp. 111-120, April 1986

[15] R. Redl, N.O. Sokal, "High-Frequency Switching-Mode Power Converters: General Considerations and Design Examples at 0.6, 1, and 14 MHz," *Tutorial at High-Frequency Power Conversion Conference*, Virginia Beach, Virginia, May 28-30, 1986

[16] A.F. Goldberg, J.G. Kassakian, "The Application of Power MOSFETs at 10MHz," *IEEE 1985 PESC Record*, pp. 91-100, 1985

[17] M.F. Schlecht, L.F. Casey, "Comparison of the Square-Wave and Quasi-Resonant Topologies", *Second Annual Applied Power Electronics Conference, San Diego, Ca.*, pp. 124-134, 1987.

[18] L.F. Casey, M.F. Schlecht, "A High Frequency, Low Volume, Point of Load Power Supply for Distributed Power Systems", *IEEE Power Electronics Specialists Conference*, Blacksburg, Virginia, pp. 439-450, 1987.

[19] M.M. Jovanovic, F.C. Lee, "Stability Analysis of Push = Pull and Bridge-Type Zero-Current-Switched Quasi-Resonant Converters", *IEEE Power Electronics Specialists Conference, Kyoto, Japan, 1988.*

[20] T. Zheng, D. Chen and F.C. Lee, "Variations of Quasi-Resonant DC-DC Converter Topologies," *IEEE PESC Record*, pp. 381-392, 1986

[21] R. Oruganti, "State-Plane Analysis of Resonant Converters" *Ph.D. Dissertation, Electrical Engineering Department, Virginia Polytechnic Institute and State University, 1987*

[22] V. Vorperian, R. Tymerski, K.H. Liu, and F.C. Lee, "Generalized Resonant Switches Part 1: Topologies," *VPEC Power Electronics Seminar, Virginia Polytechnic Institute and State University, Blacksburg, Virginia, Nov. 405, 1986*

[23] R.B. Ridley, A. Lotfi, V. Vorperian and F.C. Lee, "Design and Control of a Full-Wave Quasi-Resonant Flyback Converter", *Proceedings of IEEE APEC, 1988.*

[24] V. Vorperian, "Design and Analysis of DC-DC Resonant Converters", *Final Report for IBM-Owego, VPEC, 1986.*

[25] A.W. Lotfi, V. Vorperian and F.C. Lee, "Comparison of Stresses in Quasi-Resonant Pulse-Width-Modulated Converters", *IEEE PESC, Record, 1988.*

[26] W.A. Tabisz and F.C. Lee, "Zero-Voltage Switching Multi-Resonant Technique - A Novel Approach To Improve Performance of High-Frequency Quasi-Resonant Converters", *IEEE PESC, Record, 1988.*

[27] W.A. Tabisz and F.C. Lee, "A Novel,Zero-Voltage-Switched Multi-Resonant Forward Converter", *Proceedings, 1988, High Frequency Power Conversion Conference.*

M.M. Jovanovic, W.A. Tabisz and F.C.Lee, "Zero-Voltage Switching Technique in High Frequency Off-Line Converters", *IEEE Applied Power Electronics Conference, pp. 23-32, 1988.*

[29] W.C. Bowman, J.F. Balicki, F.T. Dickness, R.M. Honeycutt, W.A. Nitz, W. Strauss, W.B. Suiter Jr., and N.G. Niesse, "A Resonant DC-to-DC Converter Operating at 22 Megahertz", *Proceedings, 1988 IEEE Applied Power Electronics Conference, pp. 3-11.*

[30] W.A. Nitz, W.C. Bowman, F.T. Dickens, F.M. Magalhaws, W. Strauss, W.B. Suiter, N.G. Niesse, "A New Family of Resonant Rectifier Circuits for High Frequency DC-DC Converter Applications",

[31] V. Vorperian, R. Tymerski, K.H. Liu and F.C. Lee, "Generalized Resonant Switches Part 2: Analysis and Circuit Models," *VPEC Power Electronics Seminar, Virginia Polytechnic Institute and State University, Blacksburg, Virginia, Nov. 405, 1986*

[32] K.D.T. Ngo, "Generalization of Resonant Switches and Quasi-Resonant DC-DC Converters," *IEEE Power Electronics Specialists Conference, Blacksburg, Va. pp. 395-403, 1987.*